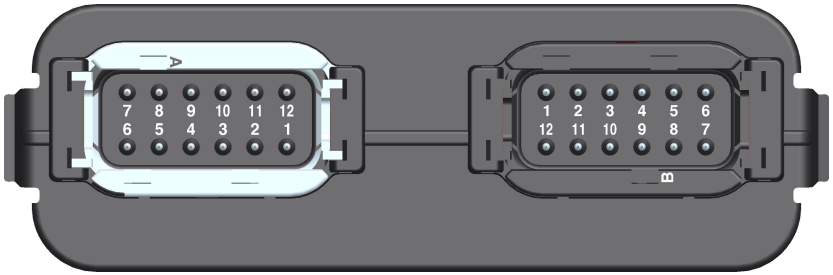

MATING CONNECTOR:
DTM06-12SA (GREY-A KEY)
0462-201-20141 SOCKET
0413-204-2005 SEAL

MATING CONNECTOR:
DTM06-12SB (BLACK-B KEY)
0462-201-20141 SOCKET
0413-204-2005 SEAL

12PA	RELAY CONTACTS
RELAY COMMON ASSIGNMENTS	
1	RELAY 6, COMMON
2	RELAY 5, COMMON
3	RELAY 4, COMMON
4	RELAY 3, COMMON
5	RELAY 2, COMMON
6	RELAY 1, COMMON
RELAY SIGNAL ASSIGNMENTS	
7	RELAY 1, NO* / NC
8	RELAY 2, NO* / NC
9	RELAY 3, NO* / NC
10	RELAY 4, NO* / NC
11	RELAY 5, NO* / NC
12	RELAY 6, NO* / NC
*DEFAULT = NORMALLY OPEN	

12PB	POWER/CAN INPUTS
1	VBATT +
FLEX ANALOG ASSIGNMENTS	
2	FLEX ANALOG INPUT 1
3	FLEX ANALOG INPUT 2
4	FLEX ANALOG INPUT 3
5	FLEX ANALOG INPUT 4
6	CAN LOW
7	CAN HIGH
DIGITAL ASSIGNMENTS	
8	DIGITAL INPUT 4
9	DIGITAL INPUT 3
10	DIGITAL INPUT 2
11	DIGITAL INPUT 1
12	GROUND

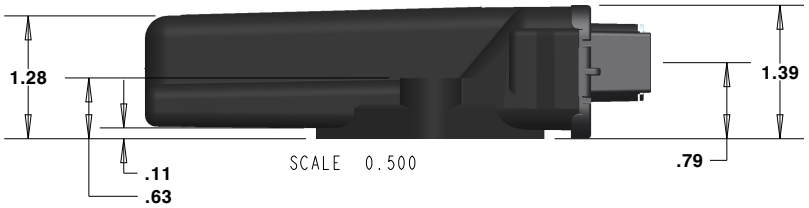

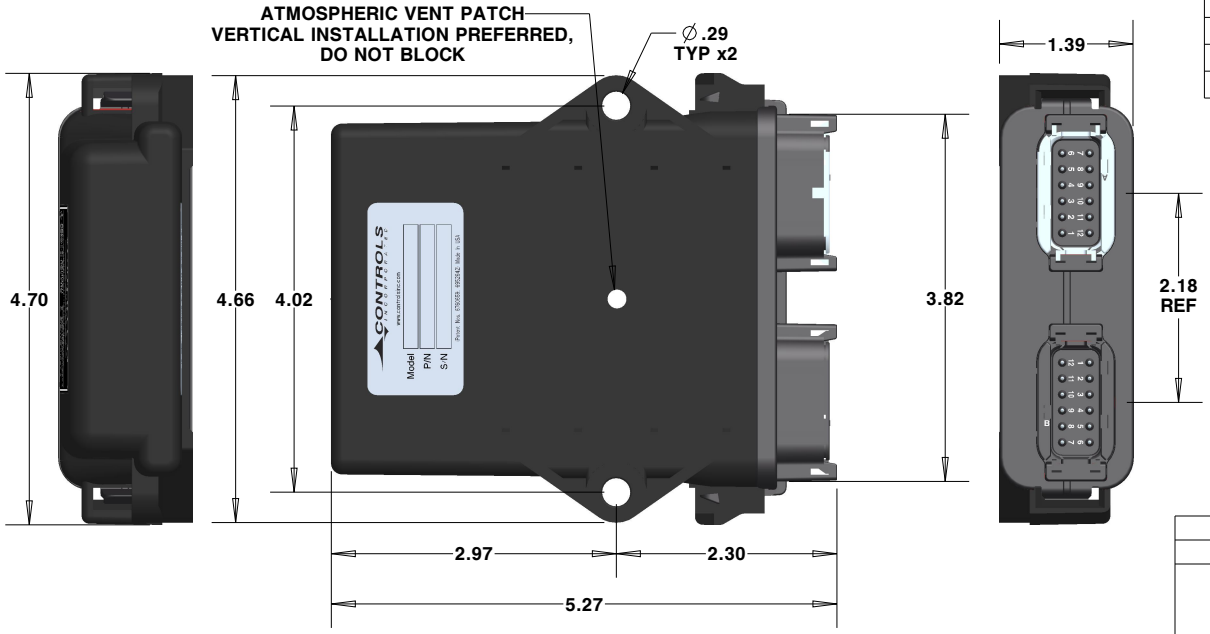

XCAN-IO-644 6 RELAYS, 4 DIGITAL & 4 ANALOG CONFIGURATION

TOLERANCES ON DIMENSIONS UNLESS OTHERWISE SPECIFIED		CONTROLS INCORPORATED	
DECIMAL PLACE TOLERANCES	0.0 = ±0.060		
	0.00 = ±0.030	WWW.CONTROLSINC.COM	330-239-4345
	0.000 = ±0.010	NEXT ASS'Y:	
ANGLES:	XX = ±0.5°	DESCRIPTION:	EXPANSION IO, 6 RELAYS
DRAWING UNITS UNLESS SPECIFIED: INCHES			
DRAWN BY: KLD	DATE: May-26-16	MATERIAL: REFERENCE BILL OF MATERIAL	
CHECKED BY: KLD	DATE: Feb-05-2021	STATUS: RELEASED	
MODEL: XCAN-IO			DRAWING NUMBER: / REV:
CONFIGURATION:		SHEET: 1 OF 1	XCAN_IO_SERIES / A

REV:	DATE:	BY:	DESCRIPTION:
A	6/14/2016	KLD	CAN INPUTS 6/7: CAN LOW/CAN HIGH PIN ASSIGNMENTS CORRECTED